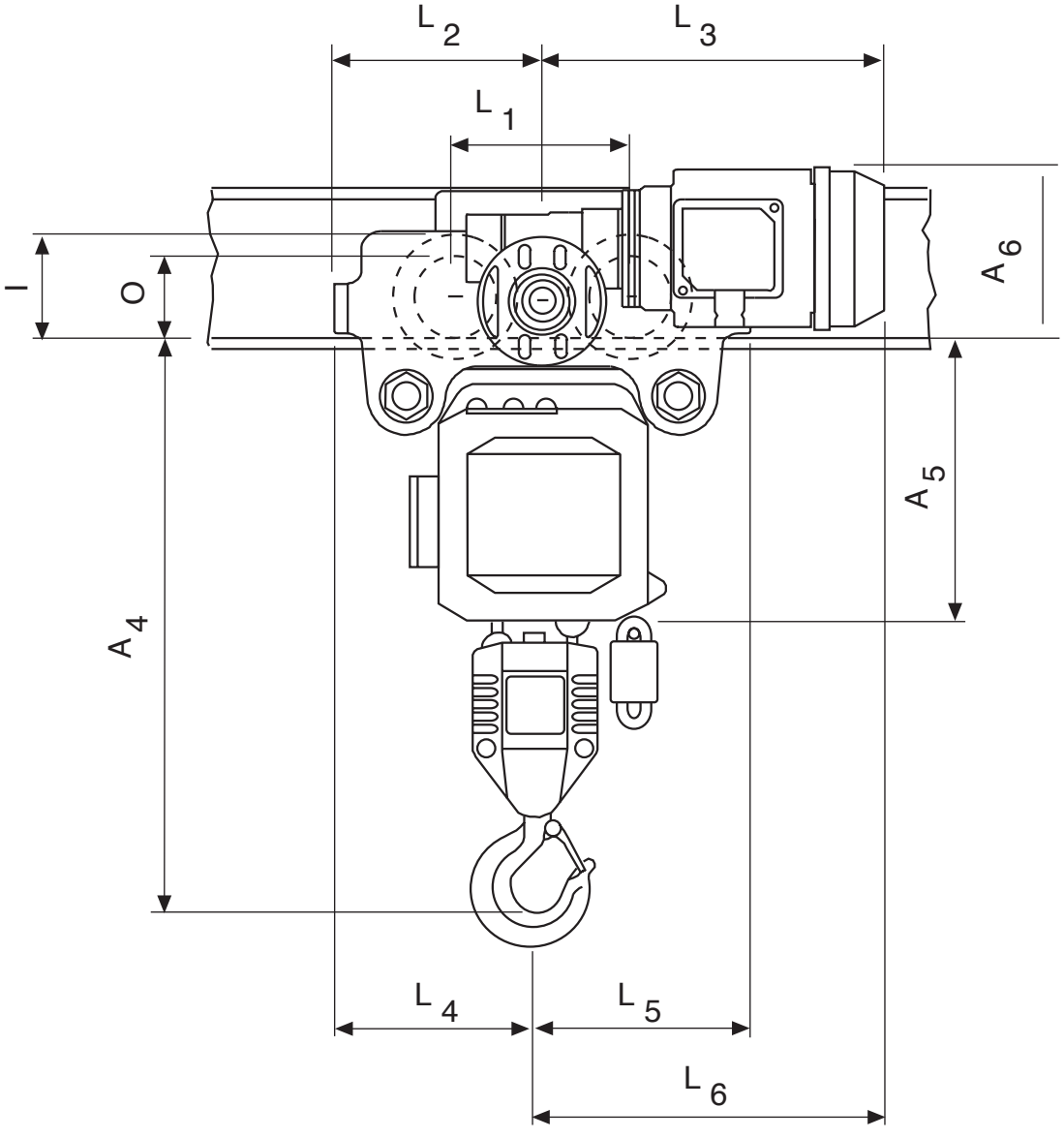
L 2
L 3
L 1
I
O
A 6
A 5
A 4
L 4
L 5
L 6

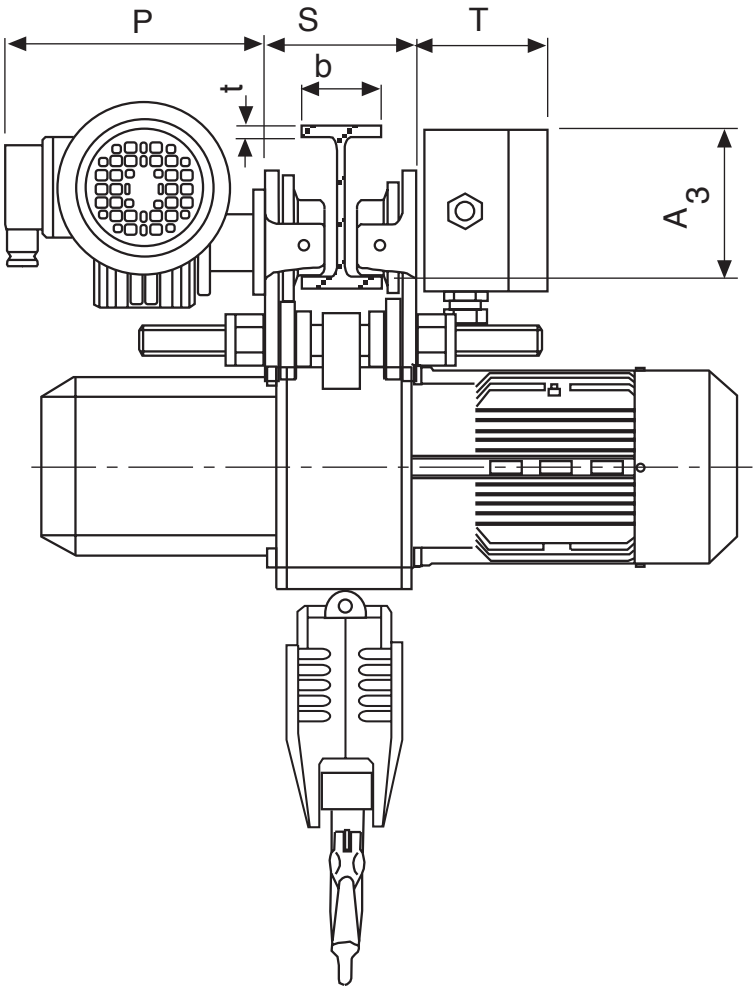
P
S
T
b
t
A 3